REACH Waste Life Stage Emission Calculator - Organic Chemicals, Solvents

(Dec. 2007)
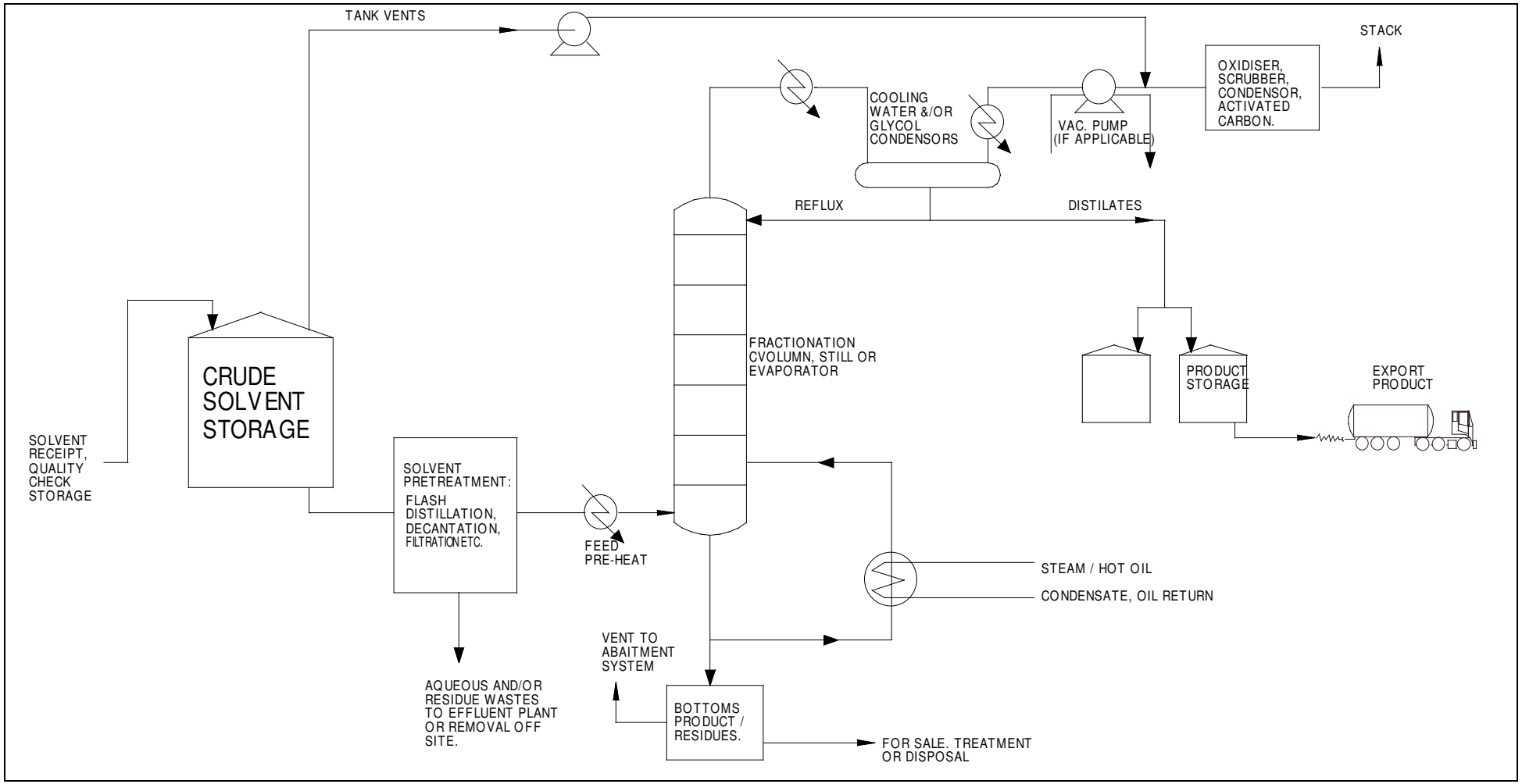
ESRG European Solvent Recycler Group